A	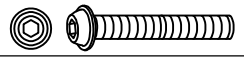	x2
B	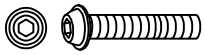	x2
C		x2
D		x4

Finish

ID:116954

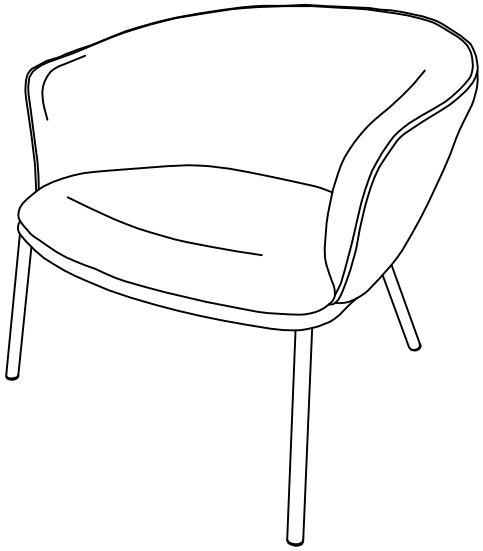

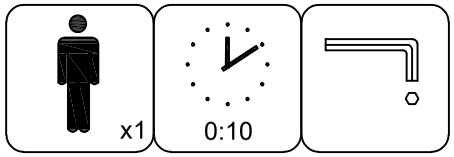
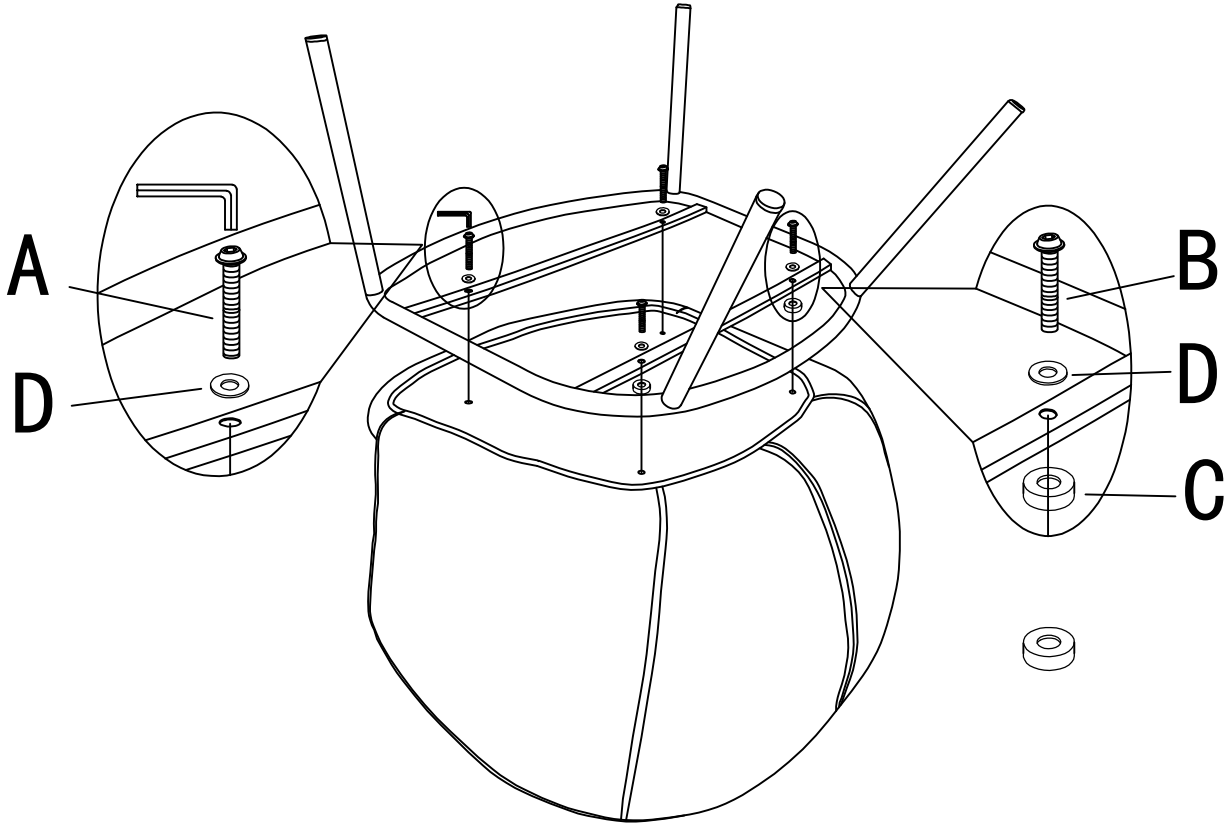
Step:1